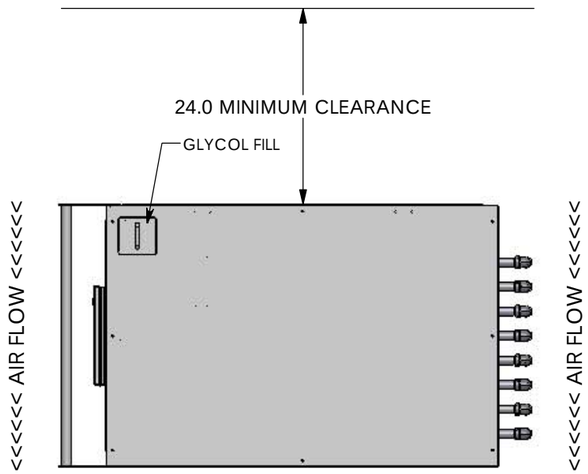

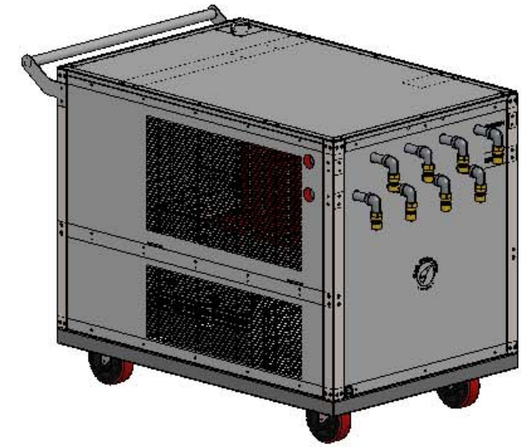

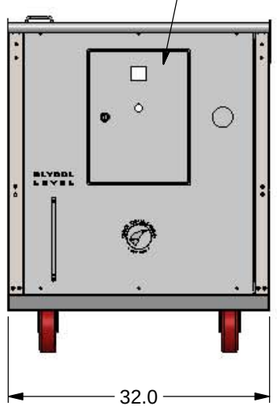

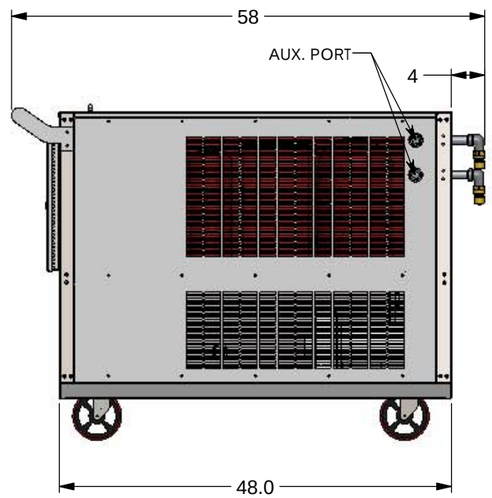

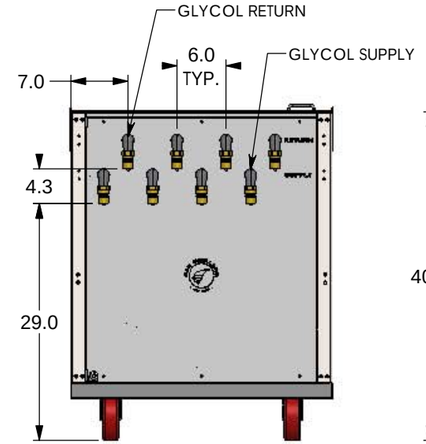

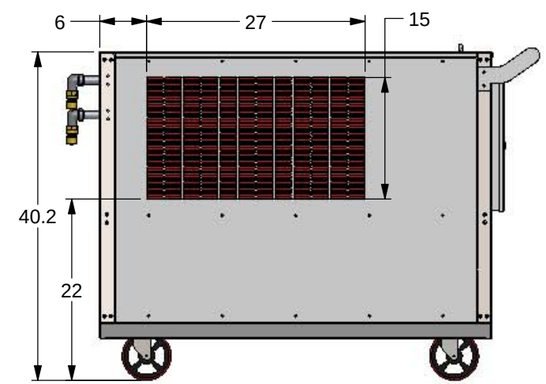

FIRE & ICE

PORTABLE CHILLER & HEATER

G&D CHILLERS

COMMITTED TO COLD

○ EST 1993 ○

3498 WEST FIRST, SUITE 1 EUGENE, OR 97402 - TEL (541) 345-3903 (800) 555-0973